UNION TECH

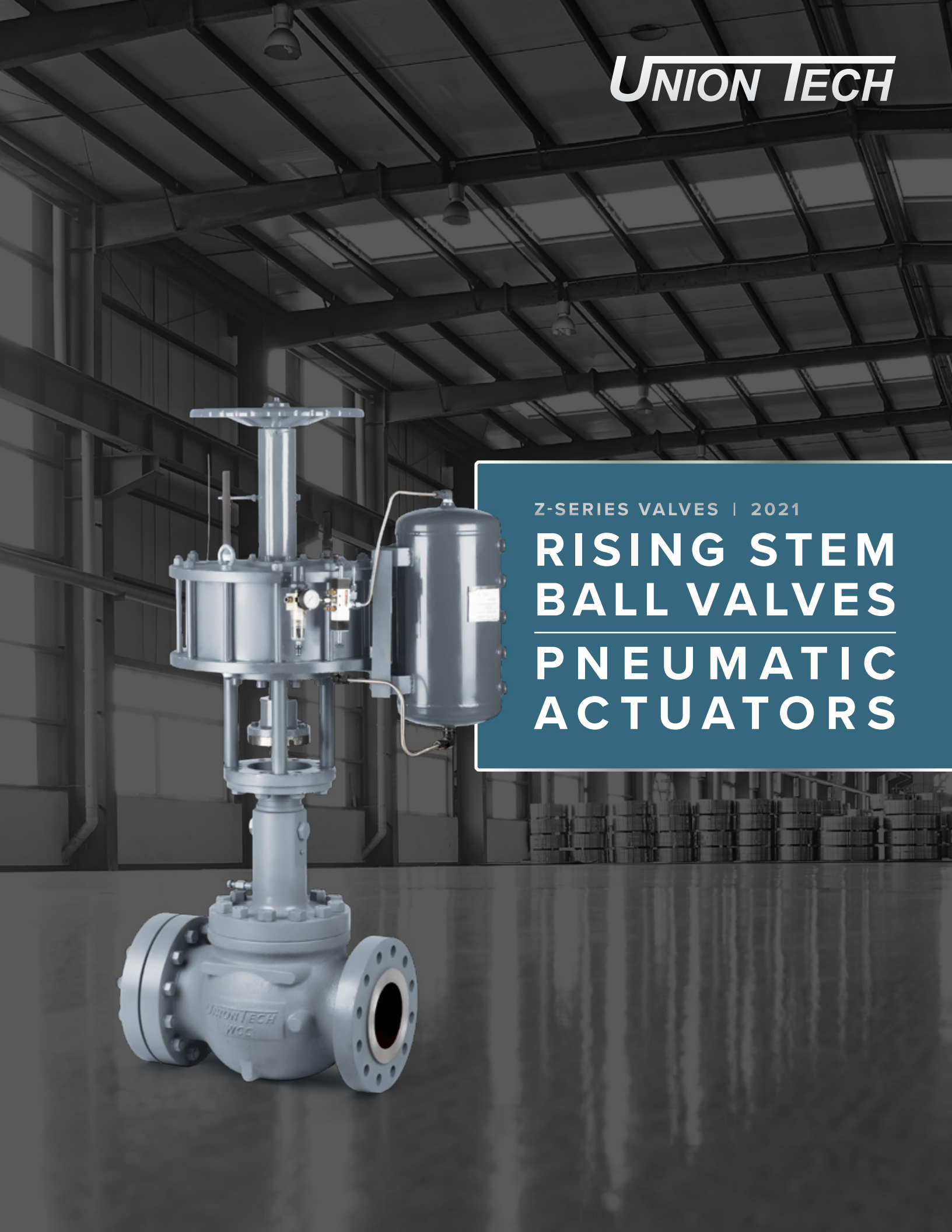

Z-SERIES VALVES | 2021

RISING STEM BALL VALVES

PNEUMATIC ACTUATORS

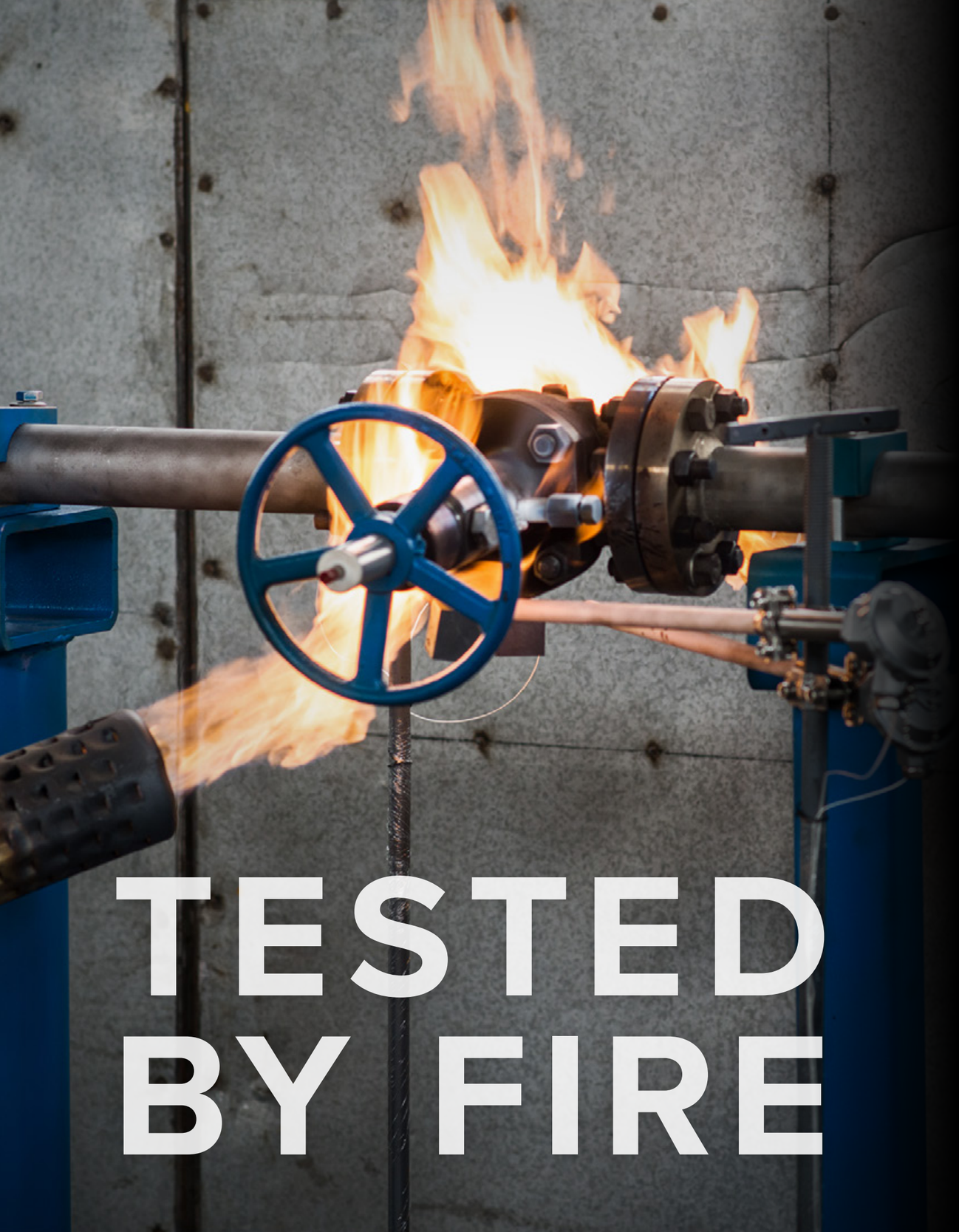

TESTED BY FIRE

ABOUT UNION TECH

Since 1982, we have dedicated ourselves to mastering the art of precision machining. From those manufacturing roots, we grew a vertically-integrated enterprise empowered to service the production needs of industries and markets worldwide. Our Valve Products division was launched in 2003 by a team of world-class mechanical engineers, seasoned valve experts, and experienced manufacturing professionals. Since then, Union Tech has engineered, manufactured, and sold over 100,000 MSBV's worldwide as the OEM for a number of different brands.

ENGINEERING AND DESIGN

Z-Series valves are highly engineered products developed by our team of engineers and industry experts. Union Tech utilizes advanced engineering techniques, such as finite element analysis (FEA) and comprehensive flow analysis to ensure every valve is optimized for its intended application. Our engineering team is always available for support with upfront materials selection, piping and instrumentation diagrams (P&ID), and general onsite operations.

MANUFACTURING

Every substantial component is machined internally; all critical processes are performed in-house. This unique approach enables us to maintain and ensure quality and consistency, shorten the supply chain to achieve aggressive delivery horizons, and leverage efficiencies across the entire production process to deliver value to our customers. Examples of insourced manufacturing processes include:

- Machining
- Welding
- Mate Lapping
- Hardfacing Coatings
- Assembly
- Testing per ANSI FCI 70.2 Class VI (or MSS-SP61, API-598, API-607, API-608, API-6D, etc.)

QUALITY AND TESTING

Quality is paramount to our organization, permeates every aspect of our operations, and starts from the very beginning. Raw materials undergo positive material identification (PMI) and hardness testing to ensure procured materials, such as forged barstock and heavy hex nuts, meet engineering specifications. Union Tech employs the Microsoft Dynamics AX ERP system to ensure full transparency and traceability of lot and serial numbered inventory across our organization. Upon manufacturing completion and prior to shipping, each and every Z-Series Valve is tested per ANSI FCI 70.2 Class VI (or MSS-SP61, API-598, API-607, API-608, API-6D, etc.).

SERVICE

Union Tech's technical service team is available 24 hours a day to ensure our valves perform up to the industry's highest standards. From the engineering team that designed the valve to the production cell that assembled and tested it, our professionals stand ready to diagnose and solve any issue that may arise. Our staff can be made available for deployment onsite to provide critical operational support.

CERTIFICATIONS

ISO 9001:2015, 15848-1 // API 6D, 607, 622, 624, and 641 // CRN // PED // GOST-R* // Safety Integrity Level (SIL) 3

* in fieri

TABLE OF CONTENTS

Rising-Stem Ball Valves

PAGE 6

Z4 RISING STEM BALL VALVE

- Features
- Valve Operation
- Inline Inspection and Repair
- Dimensional Data
- Parts and Materials

Pneumatic Actuators

PAGE 16

Z4 PNEUMATIC ACTUATOR

- Diaphragm Actuator Features
- Diaphragm Actuator Figure Numbers
- Piston Actuator Features
- Piston Actuator Figure Numbers

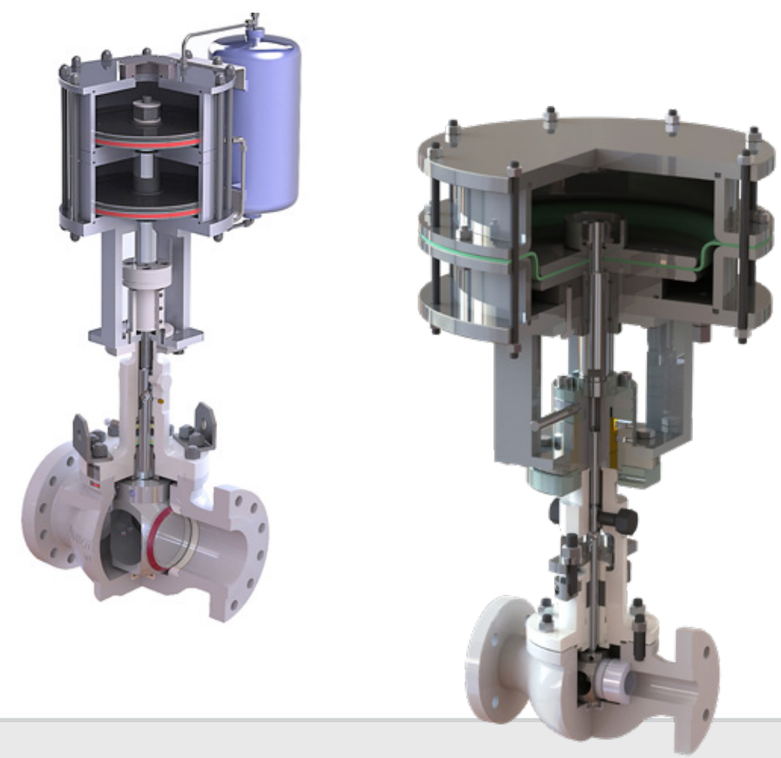

RISING STEM BALL VALVES

Z4 RISING STEM BALL VALVE

FEATURES

The design and performance advantages of the Z4 Rising Stem Ball Valve enable it to replace traditional ball, gate, and plug valves in applications, such as gas processing plants using molecular sieve systems for switching service, pipelines, gas transmission, and other high performance applications requiring frequent cycling with positive shutoff operation.

- Designed per ASME B16.34 and API Spec 6D
- 0.75" to 24.00" Bore Sizes
- 150 to 2500# ANSI Classes
- Full or Reduced Ports
- Enclosed or OS&Y Bonnet Designs
- Materials: WCC, WCB, LCC, LCB, and CF8M; Forgings and Other Materials Available
- Available in SW, BW, RFF, and NPT Ends
- Flanges Drilled per ANSI/ASME B 16.5
- Testing Standards:
  - Seat – ISO 5208 A
  - Fugitive Emissions – ISO 15848-1A
  - Fire – API 607, 7th Edition
- Operation: Manual, Electric, or Pneumatic
- Temperature Range: -155°F TO 800°F
- Low Torque Operation – Elimination of seal rubbing enables handwheel operation for most sizes; gearbox operators required for larger valves
- Dual Hardened Stem Slots & Guide Pins – Controls lift and turn of the stem
- Injectable Stem Packing Material – Enables in-service maintenance and controls fugitive emissions for enclosed bonnet models
- Top Entry Design – Provides simplified maintenance by allowing inline inspection and repair of depressurized systems
- Friction-Free Sealing – Tilt-and-turn cam mechanics eliminates abrasion resulting in reduced ball and seat wear, longer operating life, and increased return on investment
- Mechanical Cam Closure – Enables forced sealing
- Self-Cleaning – Product flow around 360° of the ball face flushes foreign material away from the seat, cleaning the valve and diminishing localized high velocity erosion damage
- Stem Guide Locking Mechanism – Superior sealing performance at stem guide with anti-loosening locking design
- Variable Seat Design Options – Soft, metal, and block & bleed seats can be specified according to specific application. Seats can be further customized to optimize performance.
- Pressed-In Seat – Enables inline replacement using extraction tool. Available in Teflon®, Nylon, or PEEK™
- Floating Seat – Leverages Z2 severe-service floating ball valve technology to streamline seat replacement
- Surface Hardened Metal Seats – Leverages commercially proven Z-Series HVOF coating technology. Metal seats are HVOF coated and mate-lapped to the ball resulting in > 60 HRc for true severe service durability. Coatings may be customized per application.

- API Standard 607, 7th Ed., June 2016
- ISO 15848-1: 2015

VALVE OPERATION

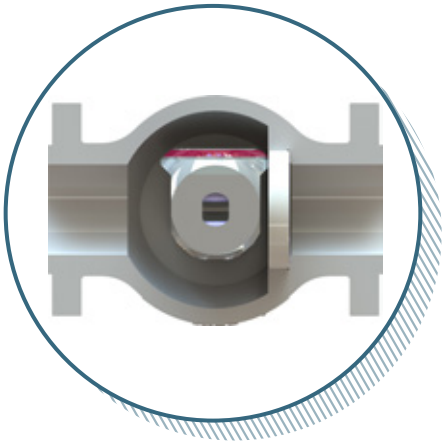

Close valve by turning the hand wheel clockwise. Stem moves downward along the double-helix stem guide channels.

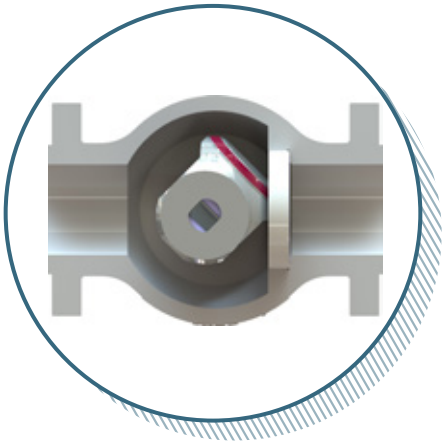

As the handwheel continues to turn, the fixed guide pins move along the double-helix channels. As a result, the ball begins to rotate.

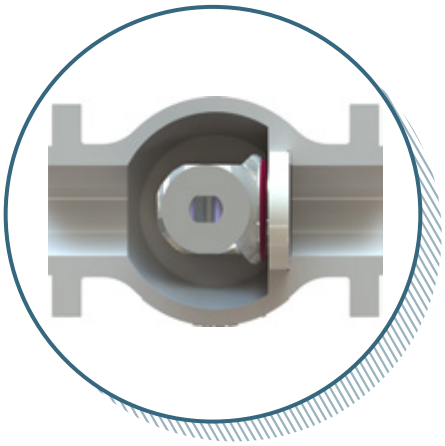

As the handwheel continues to turn, the double-helix channels rotate the ball so that it faces the seat.

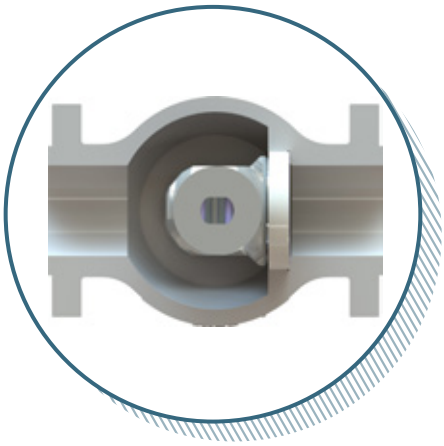

The final turns of the handwheel engages the mechanical cam, which sets the ball into the seated position, resulting in a bubble tight seal. At no point prior to this step, has the ball contacted the seat.

DIMENSIONAL DATA

End-to-End Lengths, Flanged Ends A*

	CLASS					
SIZE	150 RF	300 RF	600 RF	900 RTJ**	1500 RTJ**	2500 RTJ**
0.75	6.00*	6.00	7.50	—	—	—
1.00	8.50*	8.50*	8.50	10.00	10.00	—
1.50	9.50*	9.50*	9.50	12.00	12.00	—
2.00	7.00	8.50	11.50	14.63	14.63	17.88
3.00	8.00	11.13	14.00	15.13	18.63	23.00
4.00	12.00*	12.00	17.00	18.13	21.63	26.88
6.00	15.88*	15.88	22.00	24.13	28.00	36.50
8.00	18.00	19.75	26.00	29.13	33.13	40.88
10.00	26.50*	26.50*	31.00	33.13	39.38	—
12.00	30.00*	30.00*	33.00	38.13	45.13	—
14.00	—	32.50*	35.00	—	—	—
16.00	35.50*	35.50*	39.00	44.88	—	—
18.00	43.00*	—	—	—	—	—
20.00	—	47.00*	47.00	—	—	—
24.00	—	—	—	—	—	—

** Manufacturer's standard end-to-end dimension.*
*** For raised face flanged dimensions, contact Union Tech for details.*
Dimensional data for other sizes/pressure classes avaiable upon request.

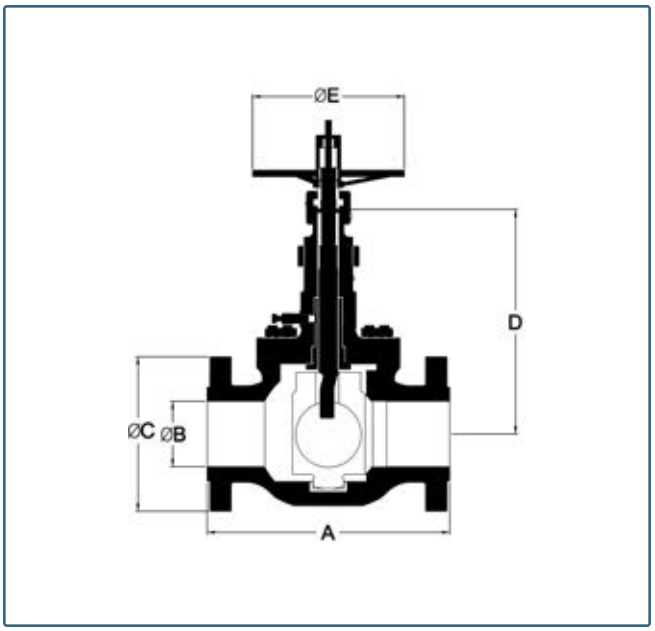

Note: Diagrams are illustrative only; actual valve may utilize different components.

End-to-End Lengths, Butt Weld Ends A*

	CLASS					
SIZE	150	300	600	900	1500	2500
0.75	—	—	—	—	—	—
1.00	—	—	—	—	—	—
1.50	—	—	—	—	—	—
2.00	8.50	8.50	8.50*	10.63*	10.63*	—
3.00	11.63*	11.63*	11.63*	13.25*	13.25*	—
4.00	14.50*	14.50*	14.50*	14.50*	21.50	—
6.00	20.00*	20.00*	18.62*	23.00*	27.75	—
8.00	23.38*	23.38*	26.00	29.00	—	—
10.00	26.50*	26.50*	31.00	33.00	—	—
12.00	30.00*	30.00*	33.00	38.00	—	—
14.00	32.50*	32.50*	35.00	—	—	—
16.00	39.00*	39.00*	39.00	—	—	—
18.00	—	—	—	—	—	—
20.00	—	—	—	—	—	—
24.00	—	—	—	—	—	—

** Manufacturer's standard end-to-end dimension.*
Dimensional data for other sizes/pressure classes avaiable upon request.

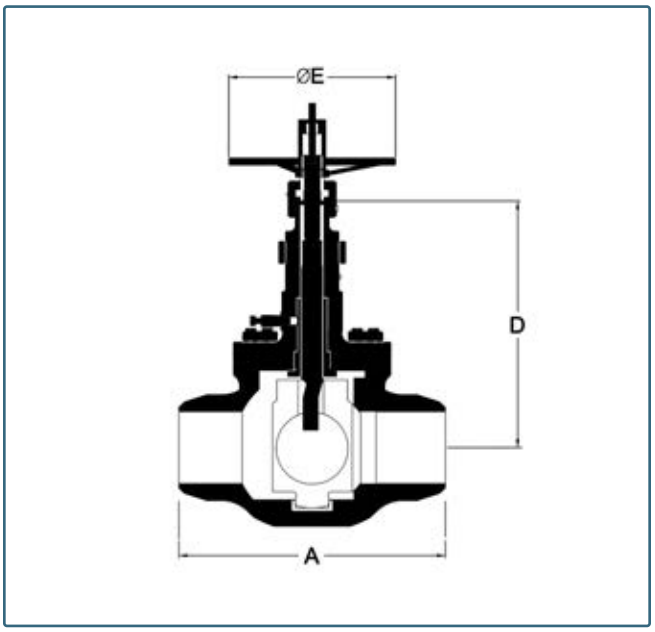

Note: Diagrams are illustrative only; actual valve may utilize different components.

Other Dimensions

	ANSI CLASS 150#				
SIZE	B MINIMUM	C	D	E	WEIGHT (LBS.)
0.75	0.75	3.88	8.21	7.09	—
1.00	1.00	4.25	8.21	7.09	—
1.50	1.50	5.00	10.05	8.66	—
2.00	1.94	6.00	9.73	8.66	—
3.00	2.94	7.50	13.00	11.81	—
4.00	3.94	9.00	15.50	13.78	—
6.00	5.94	11.00	20.40	17.72	—
8.00	7.94	13.50	23.50	23.62	—
10.00	9.94	16.00	28.20	19.88	—
12.00	11.94	19.00	32.28	—	—
14.00	13.19	21.00	—	—	—
16.00	15.19	23.50	—	—	—
18.00	17.19	25.00	43.73	—	—
20.00	19.19	27.50	—	—	—
24.00	23.19	32.00	—	—	—

	ANSI CLASS 300#				
SIZE	B MINIMUM	C	D	E	WEIGHT (LBS.)
0.75	3.75	8.21	7.09	—	—
1.00	4.88	8.21	7.09	—	—
1.50	6.12	10.05	8.66	—	—
1.94	6.50	9.73	8.66	—	—
2.94	8.25	13.00	11.81	—	—
3.94	10.00	15.50	13.78	—	—
5.94	12.50	20.40	17.72	—	—
7.94	15.00	23.50	23.62	—	—
9.94	17.50	28.20	19.88	—	—
11.94	20.50	32.28	—	—	—
13.19	23.00	—	—	—	—
15.19	25.50	—	—	—	—
17.19	28.00	43.73	—	—	—
19.19	30.50	—	—	—	—
23.19	36.00	—	—	—	—

	ANSI CLASS 600#				
SIZE	B MINIMUM	C	D	E	WEIGHT (LBS.)
0.75	3.75	8.21	7.09	—	—
1.00	4.88	8.21	7.09	—	—
1.50	6.12	10.05	8.66	—	—
1.94	6.50	9.73	8.66	—	—
2.94	8.25	13.00	11.81	—	—
3.94	10.75	15.50	13.78	—	—
5.94	14.00	20.40	17.72	—	—
7.94	16.50	23.50	23.62	—	—
9.94	20.00	28.20	19.88	—	—
11.94	22.00	32.28	—	—	—
13.19	23.75	—	—	—	—
15.19	27.00	—	—	—	—
17.19	29.25	43.73	—	—	—
19.19	32.00	—	—	—	—
23.19	37.00	—	—	—	—

	ANSI CLASS 900#				
SIZE	B MINIMUM	C	D	E	WEIGHT (LBS.)
0.75	—	—	—	—	—
1.00	1.00	5.88	—	7.09	—
1.50	1.50	7.00	—	7.09	—
2.00	1.94	8.50	—	8.66	—
3.00	2.94	9.50	—	13.78	—
4.00	3.94	11.50	—	17.72	—
6.00	5.94	15.00	—	23.62	—
8.00	7.94	18.50	—	23.62	—
10.00	9.94	21.50	—	—	—
12.00	11.94	24.00	—	—	—
14.00	12.69	25.25	—	—	—
16.00	14.69	27.75	—	—	—
18.00	16.69	31.00	—	—	—
20.00	18.56	33.75	—	—	—
24.00	22.44	41.00	—	—	—

	ANSI CLASS 1500#				
SIZE	B MINIMUM	C	D	E	WEIGHT (LBS.)
—	—	—	—	—	—
1.00	5.88	—	7.09	—	—
1.50	7.00	—	7.09	—	—
1.94	8.50	—	8.66	—	—
2.94	10.50	—	17.72	—	—
3.94	12.25	—	17.72	—	—
5.69	15.50	—	23.62	—	—
7.56	19.00	—	23.62	—	—
9.44	23.00	—	—	—	—
11.31	26.50	—	—	—	—
12.44	29.50	—	—	—	—
14.19	32.50	—	—	—	—
16.00	36.00	—	—	—	—
17.88	38.75	—	—	—	—
21.50	46.00	—	—	—	—

	ANSI CLASS 2500#				
SIZE	B MINIMUM	C	D	E	WEIGHT (LBS.)
—	—	—	—	—	—
1.00	—	—	—	—	—
1.50	—	—	—	—	—
1.69	9.25	—	8.66	—	—
2.44	12.00	—	11.81	—	—
3.44	14.00	—	13.78	—	—
5.19	19.00	—	23.62	—	—
7.06	21.75	—	—	—	—
8.81	26.50	—	—	—	—
10.44	30.00	—	—	—	—
11.50	—	—	—	—	—
13.13	—	—	—	—	—
14.75	—	—	—	—	—
16.50	—	—	—	—	—
—	—	—	—	—	—

PARTS AND MATERIALS – ENCLOSED BONNET DESIGNS

NO	QTY	DESCRIPTION	MATERIAL			
			STANDARD K3	STANDARD K7	LOW TEMP K3	LOW TEMP K7
1	1	Body	A216 WCC, A105/ LF2(A350) NACE	A216 WCC, A105/ LF2(A350) NACE	A352 LCC, A105/ LF2(A350) NACE	A352 LCC, A105/ LF2(A350) NACE
2	1	Trunnion Bushing	Cast Iron	Cast Iron	Cast Iron	Cast Iron
3	1	Ball	A216 WCC, A105/ LF2(A350) NACE	A216 WCC, A105/ LF2(A350) NACE	A352 LCC, A105/ LF2(A350) NACE	A352 LCC, A105/ LF2(A350) NACE
4	1	Seat Outer Ring	Stainless Steel	Stainless Steel	Stainless Steel	Stainless Steel
5	1	Seat Insert	Teflon	Teflon	Teflon	Teflon
6	1	Seat Inner Ring	Stainless Steel	Stainless Steel	Stainless Steel	Stainless Steel
7	1	O-Ring	Teflon	Teflon	Teflon	Teflon
8	1	Body Gasket	316/Grafoil® Filled	316/Grafoil® Filled	316/Grafoil® Filled	316/Grafoil® Filled
9	2	Ball Pin	Alloy Steel	Stainless Steel	Alloy Steel	Stainless Steel
10	2	Key	Stainless Steel	Stainless Steel	Stainless Steel	Stainless Steel
11	1	Wave Spring	Stainless Steel	Stainless Steel	Stainless Steel	Stainless Steel
12	1	Bonnet Bushing	Stainless Steel	Stainless Steel	Stainless Steel	Stainless Steel
13	1	Bonnet	A216 WCC, A105/ LF2(A350) NACE	A216 WCC, A105/ LF2(A350) NACE	A352 LCC, A105/ LF2(A350) NACE	A352 LCC, A105/ LF2(A350) NACE
14	1	Stem	Alloy Steel	Stainless Steel	Alloy Steel	Stainless Steel
15	1	Anti Extrusion Ring	Stainless Steel	Stainless Steel	Stainless Steel	Stainless Steel
16	2	Graphoil Fire Ring	Grafoil®	Grafoil®	Grafoil®	Grafoil®
17	3	PTFE V Ring	Teflon	Teflon	Teflon	Teflon
18	1	PTFE Backup V Ring	Teflon	Teflon	Teflon	Teflon
19	1	PTFE Bottom V Ring	Teflon	Teflon	Teflon	Teflon
20	*	Body Nut	ASTM A194 Gr.2H	ASTM A194 Gr.2HM	ASTM A194 Gr.7	ASTM A194 Gr.7M
21	*	Body Stud	ASTM A193 Gr.B7	ASTM A193 Gr.B7M	ASTM A320 Gr.L7	ASTM A320 Gr.L7M
22	1	Packing Fitting	Stainless Steel	Stainless Steel	Stainless Steel	Stainless Steel
23	2	Stem Guide	Alloy Steel	Stainless Steel	Alloy Steel	Stainless Steel
24	*	Grease Fitting	Stainless Steel	Stainless Steel	Stainless Steel	Stainless Steel
25	2	Socket Head Cap Screw	Stainless Steel	Stainless Steel	Stainless Steel	Stainless Steel
26	1	Bonnet Nut	Carbon Steel	Carbon Steel	Carbon Steel	Carbon Steel
27	1	Hand Wheel	Cast Iron	Cast Iron	Cast Iron	Cast Iron
28	1	Stem Protector	Aluminum alloy	Aluminum alloy	Aluminum alloy	Aluminum alloy
29	1	O-Ring	Viton	Viton	Viton	Viton
30	1	Indictor Lever	Stainless Steel	Stainless Steel	Stainless Steel	Stainless Steel
31	*	Warning Label	Stainless Steel	Stainless Steel	Stainless Steel	Stainless Steel
32	2	Lifting Eye	Carbon Steel	Carbon Steel	Carbon Steel	Carbon Steel
33	1	Stem Nut	Cast Iron	Cast Iron	Cast Iron	Cast Iron
34	2	Bearing	Bearing Steel	Bearing Steel	Bearing Steel	Bearing Steel
35	1	Tag	Stainless Steel	Stainless Steel	Stainless Steel	Stainless Steel
36	1	Injectable Packing**	Variable	Variable	Variable	Variable

** Quantity varies according to the size and class*
*** Injectable packing material depends on service conditions*
This is a partial list of material options. Many alternatives can be provided to match the actual service requirements. Consult Union Tech for detailed materials list.

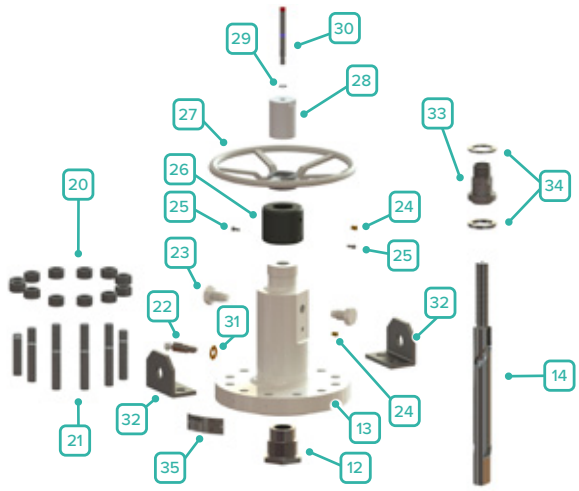

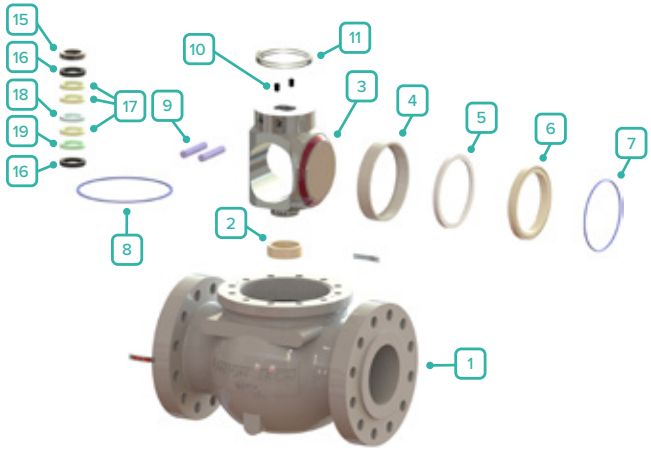

ENCLOSED BONNET DESIGNS

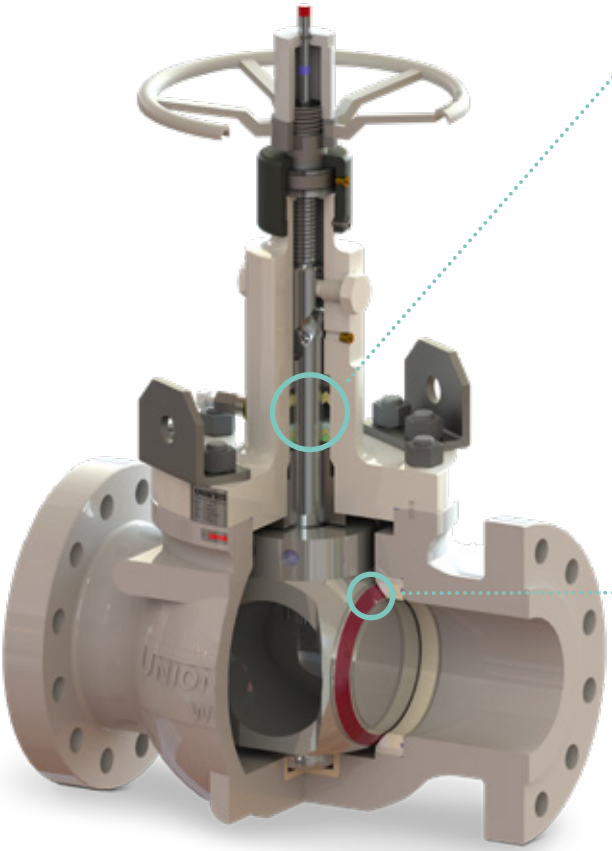

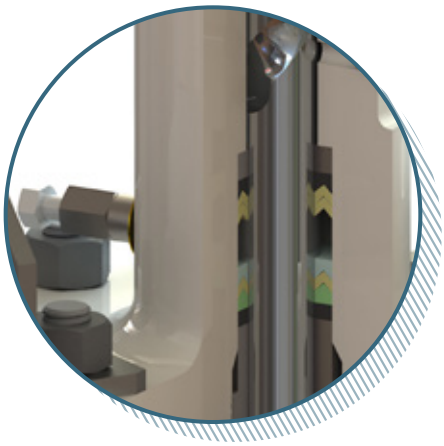

Stem Packing Detail

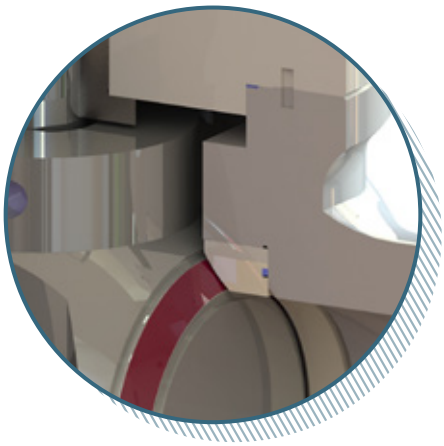

Seat Seal Detail

PARTS AND MATERIALS – OS&Y BONNET DESIGNS

NO	QTY	DESCRIPTION	MATERIAL			
			STANDARD K3	STANDARD K7	LOW TEMP K3	LOW TEMP K7
1	1	Body	A216 WCC, A105/ LF2(A350) NACE	A216 WCC, A105/ LF2(A350) NACE	A352 LCC, A105/ LF2(A350) NACE	A352 LCC, A105/ LF2(A350) NACE
2	1	Trunnion Bushing	Cast Iron	Cast Iron	Cast Iron	Cast Iron
3	1	Ball	A216 WCC, A105/ LF2(A350) NACE	A216 WCC, A105/ LF2(A350) NACE	A352 LCC, A105/ LF2(A350) NACE	A352 LCC, A105/ LF2(A350) NACE
4	1	Retaining Ring	Stainless Steel	Stainless Steel	Stainless Steel	Stainless Steel
5	1	Seal Seat	Stainless Steel	Stainless Steel	Stainless Steel	Stainless Steel
6	1	Body Gasket	316/Grafoil® Filled	316/Grafoil® Filled	316/Grafoil® Filled	316/Grafoil® Filled
7	2	Ball Pin	Alloy Steel	Stainless Steel	Alloy Steel	Stainless Steel
8	1	Bonnet Bushing	Stainless Steel	Stainless Steel	Stainless Steel	Stainless Steel
9	1	Key	Stainless Steel	Stainless Steel	Stainless Steel	Stainless Steel
10	2	Wave Spring	Stainless Steel	Stainless Steel	Stainless Steel	Stainless Steel
11	1	Bonnet	A216 WCC, A105/ LF2(A350) NACE	A216 WCC, A105/ LF2(A350) NACE	A352 LCC, A105/ LF2(A350) NACE	A352 LCC, A105/ LF2(A350) NACE
12	1	Gland	Carbon Steel	Carbon Steel	Carbon Steel	Carbon Steel
13	1	Gland Bushing	Stainless Steel	Stainless Steel	Stainless Steel	Stainless Steel
14	1	Stem Packing Assembly	Grafoil®	Grafoil®	Grafoil®	Grafoil®
15	2	Gland Stud	ASTM A193-B8	ASTM A193-B8	ASTM A193-B8	ASTM A193-B8
16	2	Gland Nut	ASTM A194-Gr8	ASTM A194-Gr8	ASTM A194-Gr8	ASTM A194-Gr8
17	4	Live Load Spring	Stainless Steel	Stainless Steel	Stainless Steel	Stainless Steel
18	1	Gland Ear	Carbon Steel	Carbon Steel	Carbon Steel	Carbon Steel
19	4	Socket Head Cap Screw	Stainless Steel	Stainless Steel	Stainless Steel	Stainless Steel
20	*	Body Nut	ASTM A194 Gr.2H	ASTM A194 Gr.2HM	ASTM A194 Gr.7	ASTM A194 Gr.7M
21	*	Body Stud	ASTM A193 Gr.B7	ASTM A193 Gr.B7M	ASTM A320 Gr.L7	ASTM A320 Gr.L7M
22	1	Stem	Alloy Steel	Stainless Steel	Alloy Steel	Stainless Steel
23	2	Stem Guide	Alloy Steel	Stainless Steel	Alloy Steel	Stainless Steel
24	1	Stem Nut	Cast Iron	Cast Iron	Cast Iron	Cast Iron
25	2	Bearing	Bearing Steel	Bearing Steel	Bearing Steel	Bearing Steel
26	1	Bonnet Nut	Carbon Steel	Carbon Steel	Carbon Steel	Carbon Steel
27	*	Grease Fitting	Stainless Steel	Stainless Steel	Stainless Steel	Stainless Steel
28	2	Socket Head Cap Screw	Stainless Steel	Stainless Steel	Stainless Steel	Stainless Steel
29	1	Hand Wheel	Cast Iron	Cast Iron	Cast Iron	Cast Iron
30	1	Stem Protector	Aluminum alloy	Aluminum alloy	Aluminum alloy	Aluminum alloy
31	1	Indictor Lever	Stainless Steel	Stainless Steel	Stainless Steel	Stainless Steel
32	1	O-Ring	Viton	Viton	Viton	Viton
33	2	Lifting Eye	Carbon Steel	Carbon Steel	Carbon Steel	Carbon Steel
34	1	Tag	Stainless Steel	Stainless Steel	Stainless Steel	Stainless Steel

** Quantity varies according to the size and class*
*** Injectable packing material depends on service conditions*
This is a partial list of material options. Many alternatives can be provided to match the actual service requirements. Consult Union Tech for detailed materials list.

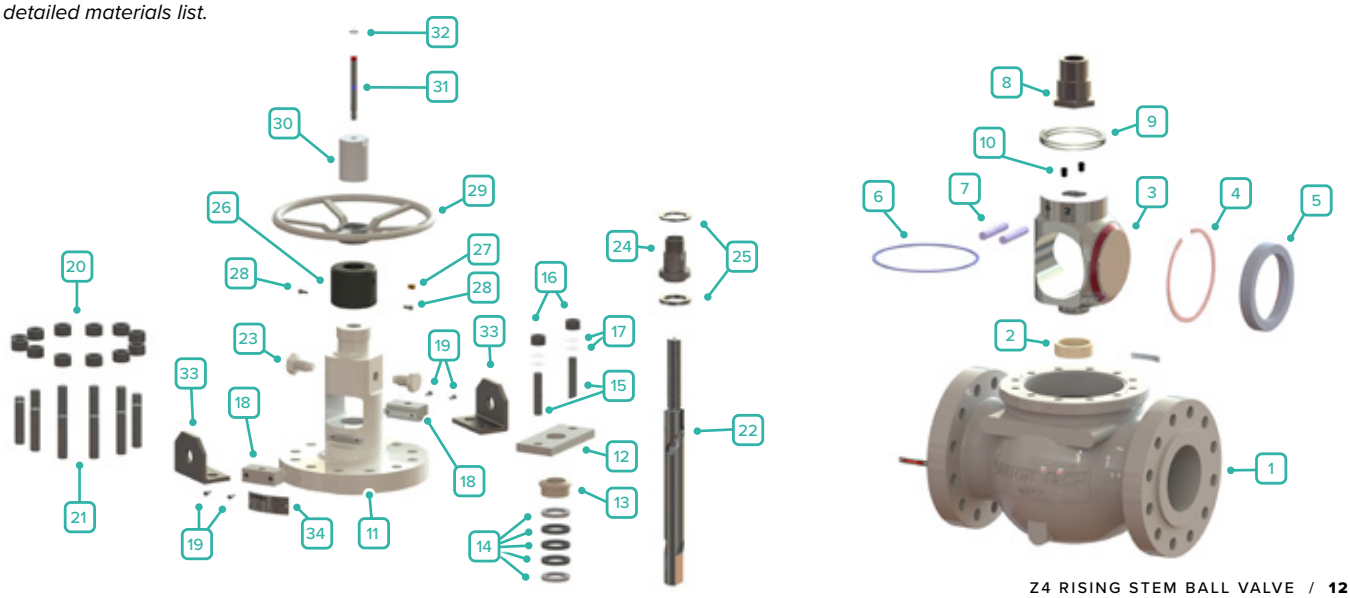

OS&Y BONNET DESIGNS

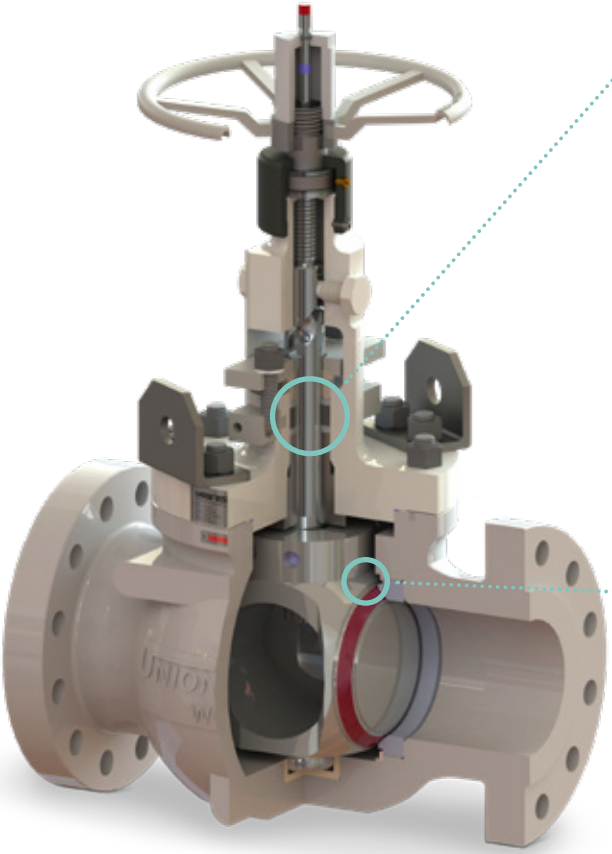

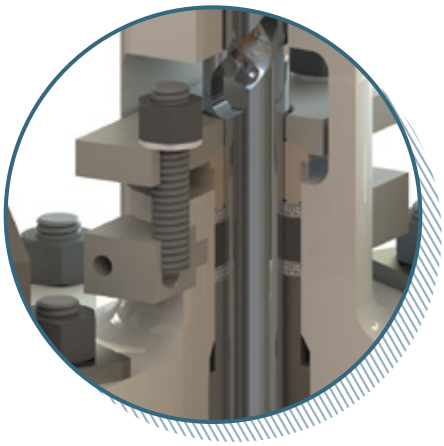

Stem Packing Detail

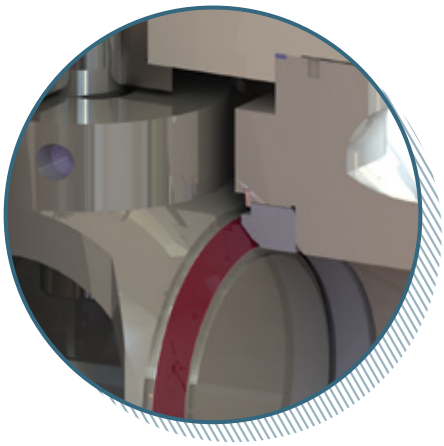

Seat Seal Detail

FIGURE NUMBERS

END SIZE NAME	END SIZE NUMBER
0.75	N
1.00	A
1.50	U
2.00	B
3.00	C
4.00	D
6.00	E
8.00	F
10.00	G
12.00	H
14.00	I
16.00	J
18.00	K
20.00	L
24.00	M
Custom	Z

BORE SIZE NAME	BORE SIZE NUMBER
0.75	N
1.00	A
1.50	U
2.00	B
3.00	C
4.00	D
6.00	E
8.00	F
10.00	G
12.00	H
14.00	I
16.00	J
18.00	K
20.00	L
24.00	M
Custom	Z

ANSI CLASS NAME	ANSI CLASS NUMBER
150#	1
300#	2
600#	3
900#	4
1500#	5
2500#	6
Custom	Z

END TYPE NAME	END TYPE NUMBER
Socket Weld	S
Butt Weld	B
RF Flange	R
RTJ	J
Hub	H
Male NPT	M
Female NPT	F
Custom	Z

6.00 End Size

6.00 Bore Size

600# ANSI Class

RF Flange End Type

Example : Z4-EE3R1aH1

K3 Standard Trim

PTFE up to 500°F Seat Type

Hand Wheel Control

General Service Injection Packing

TRIM NAME	TRIM NUMBER
K3 Standard	1
K3 Low Temp	4
K3 OSY	6
K3 OSY Low Temp	8
K7 Standard	2
K7 Low Temp	5
K7 OSY Low Temp	9
K7 OSY	7
K8 Standard	3
Custom	Z

SEAT TYPE NAME	SEAT TYPE NUMBER
PTFE up to 500°F	a
PEEK up to 570°F	b
Nylon up to 250°F	c
Metal Seated	d
Block and Bleed-Nylon	e
Custom	z

CONTROL NAME	CONTROL NUMBER
Hand Wheel	H
Electric Actuator	E
Pneumatic Actuator	P
Gear	G
Adaption	D
Bare Stem	B
Custom	Z

INJ PACKING NAME	INJ PACKING NUMBER
Unpacked (empty)	—
General Service	1
Ammonia Service	2
Oxygen Service	3
High Temp (Graphite Rings, OSY)	4
316SS Valve	6
MTBE Service	7
Custom	Z

TRIM NOTES

STANDARD K3: -20°F to 500°F	
BODY	A216 WCC/WCB, A105/ LF2(A350) NACE
BONNET	A216 WCC/WCB, A105/ LF2(A350) NACE
STEM	Alloy Steel
BALL	Carbon steel
SEAT	Stainless Steel
BALL FACE*	Alloy Steel /Stainless Steel

STANDARD K7: -20°F to 500°F	
BODY	A216 WCC/WCB, A105/ LF2(A350) NACE
BONNET	A216 WCC/WCB, A105/ LF2(A350) NACE
STEM	Stainless Steel
BALL	Carbon steel
SEAT	Stainless Steel
BALL FACE*	Alloy Steel /Stainless Steel

K8 CORROSIVE (316SS): -155°F to 800°F	
BODY	A351 CF8M/316SS/316L
BONNET	A351 CF8M/316SS/316L
STEM	Stainless Steel
BALL	Stainless Steel
SEAT	Stainless Steel
BALL FACE*	Alloy Steel /Stainless Steel

K3 LOW TEMP: -50°F TO 500°F	
BODY	A352 LCC, A105/ LF2(A350) NACE
BONNET	A352 LCC, A105/ LF2(A350) NACE
STEM	Alloy Steel
BALL	Carbon steel
SEAT	Stainless Steel
BALL FACE*	Alloy Steel /Stainless Steel

K7 LOW TEMP: -50°F TO 500°F	
BODY	A352 LCC, A105/ LF2(A350) NACE
BONNET	A352 LCC, A105/ LF2(A350) NACE
STEM	Stainless Steel
BALL	Carbon steel
SEAT	Stainless Steel
BALL FACE*	Alloy Steel /Stainless Steel

K3 OSY: -20°F TO 800°F	
BODY	A216 WCC/WCB, A105/ LF2(A350) NACE
BONNET	A216 WCC/WCB, A105/ LF2(A350) NACE
STEM	Alloy Steel
BALL	Carbon steel
SEAT	Stainless Steel
BALL FACE*	Alloy Steel /Stainless Steel

K7 OSY: -20°F TO 650°F	
BODY	A216 WCC/WCB, A105/ LF2(A350) NACE
BONNET	A216 WCC/WCB, A105/ LF2(A350) NACE
STEM	Stainless Steel
BALL	Carbon steel
SEAT	Stainless Steel
BALL FACE*	Alloy Steel /Stainless Steel

K3 OSY LOW TEMP: -50°F TO 800°F	
BODY	A352 LCC, A105/ LF2(A350) NACE
BONNET	A352 LCC, A105/ LF2(A350) NACE
STEM	Alloy Steel
BALL	Carbon steel
SEAT	Stainless Steel
BALL FACE*	Alloy Steel /Stainless Steel

K7 OSY LOW TEMP: -50°F TO 650°F	
BODY	A352 LCC, A105/ LF2(A350) NACE
BONNET	A352 LCC, A105/ LF2(A350) NACE
STEM	Stainless Steel
BALL	Carbon steel
SEAT	Stainless Steel
BALL FACE*	Alloy Steel /Stainless Steel

** Optional component for superceded models*

This is an illustrative list of trim component materials. Alternatives may be provided to match actual service requirements. Consult Union Tech for detailed material list.

PNEUMATIC ACTUATORS

Z4 PNEUMATIC ACTUATOR

D-SERIES DIAPHRAGM ACTUATOR FEATURES

- Union Tech Z4 Pneumatic Diaphragm Actuators are designed specifically for smaller-sized Union Tech Z4 Rising-Stem Ball Valves; mechanical operation of the actuator is matched and tuned precisely to that of the Z4.
- Recommended for Z4 Valves sized 4" or smaller
- Maximum air pressure = 65 psi
- Carbon steel housing with phosphate coating applied to external surfaces for corrosion resistance
- Tri-layer design maintains structural stability and enhances durability
- Diaphragm consists of ruggedized nitrile elastomer – which was engineered and tested to surpass 100,000 cycles under 0.25 Mpa

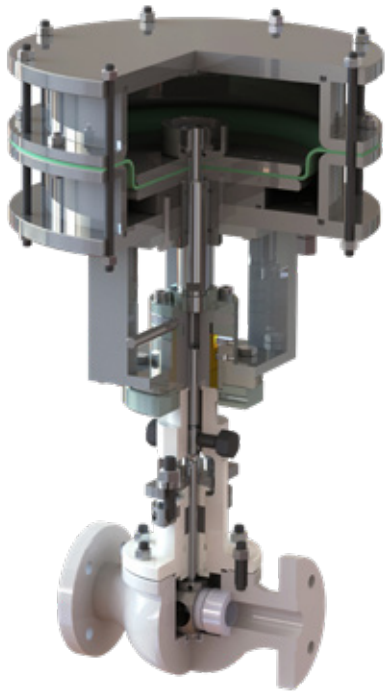

PNEUMATIC DIAPHRAGM ACTUATOR STYLES

Double Acting

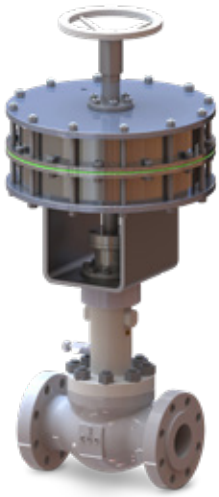

Spring Close

FIGURE NUMBERS

ACTUATOR STYLE NAME	ACTUATOR STYLE NUMBER
Diaphragm Double-Acting	D1
Diaphragm Spring Close	D2
Diaphragm Spring Open	D3
Custom	SP

NOMINAL SIZE NAME	NOMINAL SIZE NUMBER
250mm	25
350mm	35
370mm	37
400mm	40
450mm	45
Etc.	Etc.

STROKE LENGTH NAME	STROKE LENGTH NUMBER
60mm	06
100mm	10
120mm	12
Etc.	Etc.

PRODUCT CATEGORY NAME	PRODUCT CATEGORY NUMBER
Actuator	A
Custom	Z

Diaphragm Double-Acting Actuator Style

370mm Nominal Size

60mm Stroke Length

Actuator Product Category

Example : D13706-A-B2-S

2.00 Bore Size

Snubber Accessories

300# ANSI Class

BORE SIZE NAME	BORE SIZE NUMBER
0.75	N
1.00	A
1.50	U
2.00	B
3.00	C
4.00	D
6.00	E
8.00	F
10.00	G
12.00	H
14.00	I
16.00	J
18.00	K
20.00	L
24.00	M
Custom	Z

ANSI CLASS NAME	ANSI CLASS NUMBER
150#	1
300#	2
600#	3
900#	4
1500#	5
2500#	6
Custom	Z

ACCESSORIES NAME	ACCESSORIES NUMBER
Manual Close Mechanism	M
Two-Way Manual Mechanism	T
Snubber	S
Custom	Z

P-SERIES PISTON ACTUATOR FEATURES

- Union Tech Z4 Pneumatic Piston Actuators are designed specifically for larger-sized Union Tech Z4 Rising-Stem Ball Valves
- Recommended for Z4 valves sized above 4"
- Driven by compressed air pressure, the piston actuator generates sufficient linear thrust to operate larger-sized Z4 Rising-Stem Ball Valves
- Carbon steel housing with chrome-plated inner surfaces for corrosion resistance and extended service life
- Upgradable design allows for up to 3 cylinders for increased thrust output
- Nylon belt and double nitrile O-ring design effectively seals and reduces friction for piston subassembly
- Equipped with damping oil tank for shock absorption

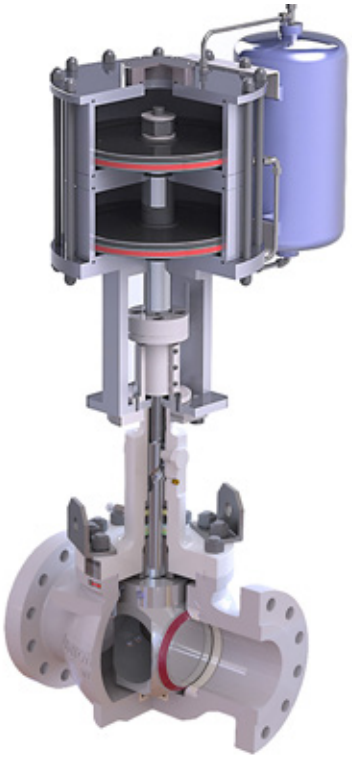

PNEUMATIC PISTON ACTUATOR STYLES

Double Acting

Spring Close

FIGURE NUMBERS

ACTUATOR STYLE NAME	ACTUATOR STYLE NUMBER
Piston Double-Acting	P1
Piston Spring Close	P2
Custom	SP
Custom	SP

NOMINAL SIZE NAME	NOMINAL SIZE NUMBER
250mm	25
350mm	35
370mm	37
400mm	40
450mm	45
Etc.	Etc.

STROKE LENGTH NAME	STROKE LENGTH NUMBER
60mm	06
80mm	08
100mm	10
120mm	12
Etc.	Etc.

CYLINDERS NAME	CYLINDERS NUMBER
1	1
2	2
3	3
Custom	Z

Piston Double-Acting Actuator Style

350mm Nominal Size

100mm Stroke Length

1 Cylinder

Example : P135101-A-B2-M

Actuator Product Category

2.00 Bore Size

300# ANSI Class

Manual Close Mechanism Accessories

PRODUCT CATEGORY NAME	PRODUCT CATEGORY NUMBER
Actuator	A
Custom	Z

BORE SIZE NAME	BORE SIZE NUMBER
0.75	N
1.00	A
1.50	U
2.00	B
3.00	C
4.00	D
6.00	E
8.00	F
10.00	G
12.00	H
14.00	I
16.00	J
18.00	K
20.00	L
24.00	M
Custom	Z

ANSI CLASS NAME	ANSI CLASS NUMBER
150#	1
300#	2
600#	3
900#	4
1500#	5
2500#	6
Custom	Z

ACCESSORIES NAME	ACCESSORIES NUMBER
Manual Close Mechanism	M
Two-way Manual Mechanism	T
Hydraulic Open, Manual Close	H
Custom	Z

QUALITY. SPEED. SCALE.

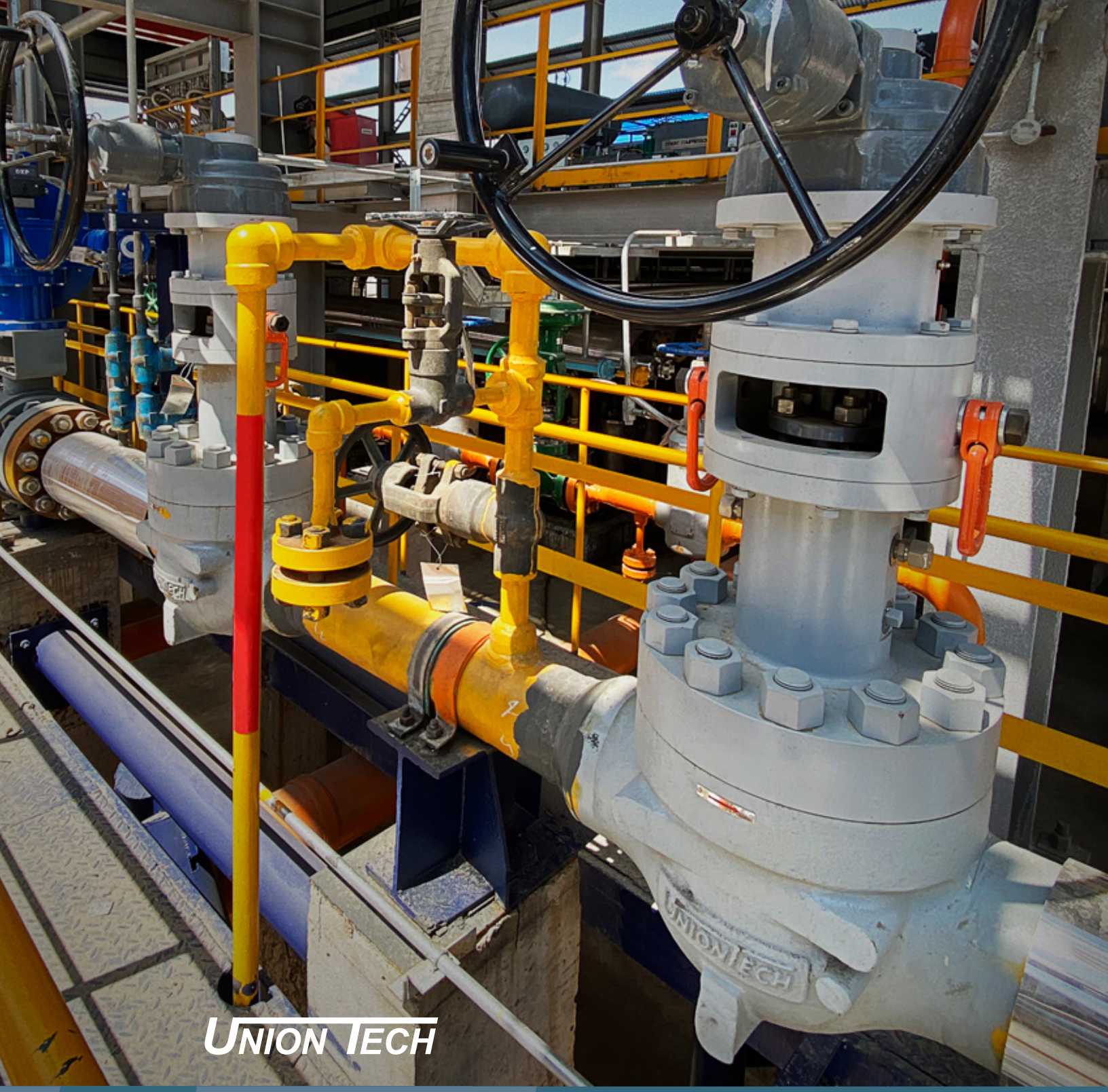

11727 Veterans Memorial Drive
Houston, Texas 77067
281-583-7601
www.uniontechmfg.com

Copyright © Union Tech Co., LLC. All rights reserved. Monel® and Inconel® are registered trademarks of Special Metals Corporation, USA. Hastelloy® is a registered trademark of Haynes International, Inc. Stellite® is a registered trademark of Deloro Stellite. Grafoil® is a registered trademark of Union Carbide Corporation.